Computational investigation of material combinations in triboelectric generators

Steffin Varghese
Micro/Nanofluidics
Research Laboratory
Department of Mechanical Engineering
CET, Kerala, India
steffin92@gmail.com

ShimnaShafeek
University of Bolton
RAK Academic Center
UAE
s.shafeek@bolton.ac.uk

Ranjith S Kumar
Micro/nanofluidicsResearch Laboratory
CET, Kerala, India
ranjith@cet.ac.in

Mini.R.S
Department of Mech Engg.
CET, Kerala, India
rsmini@cet.ac.in

***Abstract*— The recent development of internet of things (IoT) and sensor networks dramatically increased the demand for robust energy harvesting techniques for sensors to work in self- powered mode. Scavenging mechanical energy from ambient environment through friction and vibration has attracted great attention. Among electromagnetic, electrostatic, piezoelectric and triboelectric mechanical energy harvesting technologies, triboelectric generators (TEGs) based on coupling of contact electrification and electrostatic induction, shows a promising technology owing to their numerous advantages: high output power, high energy conversion efficiency and low cost materials and fabrication. This paper focuses on the computational study of sliding mode of TEG with different triboelectric material pairs using Comsol Multiphysics. The output characteristics of the TEG are evaluated with respect to the material properties. The effect of material selection is investigated in the selected TEG sliding model in terms of voltage with respect to the sliding distance.**

Keywords: Internet of Things, self-powered, triboelectric generators

I. INTRODUCTION

Exploring alternative energy sources from the ambient environment has drawn extensive attention due to the issue of increasing energy demand [1]. The recent development of internet of things and sensor networks dramatically change the traditional understanding about energy. The general characteristics of these types of power units are mobility, availability and sustainability. The most conventional energy technology is using batteries, which may not be the solution for IoT where trillions of batteries that are vastly distributed and each having a limited life time. As predicted by Cisco, by 2020 the world will have trillions of sensor units distributed on the earth. It will be a terrible task for replacing and recycling the batteries in a larger scale. Thus, IoT would be difficult without making the devices self-powered. It is thus desirable to integrate an energy harvester together with a battery to form a self-powered system and it is likely to be an ideal choice [2].

Energy harvesting from mechanical motions and vibrations has attracted interest and is one of the promising options for gathering energy from macro scale to tiny wattages of power and to integrate in low powered electronic devices to work as self-powered device [3]. The abundant waste mechanical energy can be harvested through electromagnetic, electrostatic, piezoelectric effects and tribo electric effect among which tribo electric generators are the most efficient approach [4]. The triboelectric effect being an old phenomenon which was treated as adverse because of the dangers to electronics and public safety and has been regarded as a negative effect in our day today life. However, it has recently been utilized as an extremely effective means to harvest mechanical energy using organic/polymer nanogenerators where the energy conversion is achieved by coupling between the triboelectric and the electrostatic effects [5]. Tribo electric effect initiates from the contact between two materials that differ in tribo electric polarity which yields surface charge transfer. As they separate, a dipole moment is established, and drives electrons through external loads. The TEG drives the charges, in which current flows back and forth between the electrodes in alternating current (AC) mode. Triboelectric nanogenerators (TEGs) have shown advantages of high energy harvesting efficiency with a clear and low manufacturing cost. The ample material selection list and high system reliability made the current era to think about TEG to implement as an energy harnessing source [6].

In this paper, the theoretical consideration of TEG working in contact and sliding mode are discussed. The output characteristics of sliding mode TEG are simulated and analyzed using Comsol Multiphysics for TENG combinations. The performance analysis of TEG is evaluated by considering various material combinations of positive and negative affinity from the triboelectric series.

II. STUDY ,ANALYSIS AND MODELING OF TEGS

A. Principle of tribo electric generator

When a material contacts a dissimilar material, by friction it gets electrically charged and is termed this effect as triboelectric. Triboelectrification is said to occur by forming a chemical bond due to adhesion as well as the transfer of charge in the form of ions or molecules between the contacting materials to balance the electrochemical potential. During the process of separation, negative and positive polarities are generated due to the tendency of materials to lose and gain electrons thereby generating charges on the dielectric surfaces. The presence of triboelectric charges on dielectric surfaces can be a force for driving electrons in the electrode to flow in order to balance the electric potential drop [7].

978-1-5386-0872-2/17/$31.00 ©2017 IEEE

B. Basic modes of Triboelectric generator

The triboelectric generators work under four modes based on the position, number and the way the dielectrics are arranged and move. The four modes are vertical Contact separation mode, Lateral Sliding mode, Single Electrode mode and Freestanding triboelectric layer mode [7-8].

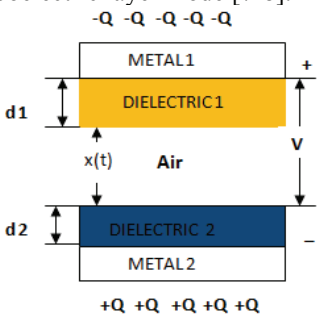

Fig. 1. A schematic model of the ccontact mode TEG.

In Vertical Contact mode (Fig 1), which is the simplest mode where two different dielectric materials are arranged with one top layer electrode and bottom layer electrode. A potential drop is generated in this mode when there creates a gap by an external force. A flow of electrons from one electrode to another occurs when the two electrodes were connected across a load. The potential generated in this case will be reduced to zero when the gap is removed by moving the dielectrics close to each other by contact. The dielectric-electrode arrangement in sliding mode (Fig 2) is same as that of the contact mode except that the two layers will slide relative to each other thereby generating triboelectric charges on the surface. The sliding layers when connected across load will generates an AC output due to the periodic sliding apart and closing of the triboelectric layers [7-8].

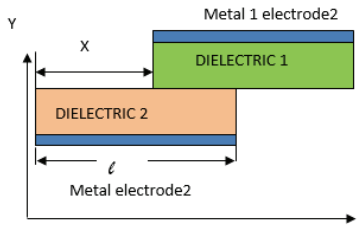

Fig 2. schematic model of the sliding mode TEG

The Single Electrode mode is the dielectric arrangement when there is a problem in making one of the electrode not to be electrically connected and which is connected to the ground and will work in the same manner as that of contact and sliding mode. A freestanding mode is the one in moving object where between the layers itself the charges are generated due to the motion of the object which in turn will produce equal positive and negative charged across the electrodes when connected across load [7-8].

C. Triboelectric material series

The selection of material pairs for the triboelectric generator depends on the polarity where they can gain or lose electrons when in contact [12]. Most of the materials in our day to day life are having the triboelectric effect, hence the optimal selection of the material pairs is important. The given triboelectric series (Fig 3) shows some conventional materials which are arranged in priority of losing and gaining electrons. From the series, it shows that further the material pairs the greater will be the triboelectric effect.

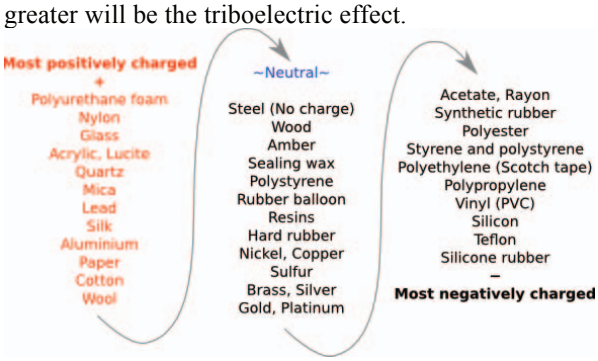

Fig. 3. Triboelectric affinity of various materials [Tikalon Blog by Dev Gualtieri]

D. Theoretical model

A. Mathematical Expression of a Triboelectric generator Model

The mathematical equation for power generation in TEG based on the theory of the charge generation between two dissimilar dielectric pairs depends on the voltage V generated due to the force applied between the electrodes, the charge Q generated and the distance x between the layers subjected to triboelectrification. Hence the relation between the three characteristics, V,Q and x can be expressed as follows [9-11],

$$V = -\frac{Q}{C(x)} + V_{oc}(x) \tag{1}$$

where V_{oc} represents the voltage generated at open circuit condition.

B. Output Voltage in TEG modes

Contact mode TEG

The output voltage in open circuit V_{oc}, short circuit charge generated Q_{sc} and the capacitance C between the dielectrics in contact mode with dielectrics of thickness d1, d2 separated by a distance x having surface charge density σ and area surface S are expresses as follows[9-11],

$$V_{oc} = \frac{\sigma\, x(t)}{\varepsilon_0} \tag{2}$$

$$Qsc = \frac{S\sigma\, x(t)}{d + x(t)} \tag{3}$$

$$C = \frac{\varepsilon_0 S}{d + x(t)} \tag{4}$$

From equations 2, 3& 4the potential difference, V can be written as

$$V = -\frac{Q}{S\,\varepsilon_0}(d + x(t)) + \frac{\sigma\, x(t)}{\varepsilon_0} \quad (5)$$

$$d = \sum_{i=1}^{n} \frac{di}{\varepsilon ri}$$

where ε_0 is the permittivity of air,d the effective plate thickness and Ɛ ri is the relative effective thickness.

Sliding mode TEG

Consider a sliding mode TEG as shown in Fig 3 with lateral dimension of dielectric layers as l, thickness d1, d2 and with, the surface charge density of σ.

The output voltage in open circuit V_{OC} and capacitance C for a sliding mode TEG having dielectrics of thickness d1,d2 with lateral distance l, width w ,relative dielectric constants ε_{r1} and ε_{r2} separated by a distance of x is mathematically expressed as[9-11],

$$V = -\frac{d}{w\,\varepsilon_0(l - x)}\,Q + \frac{\sigma\, dx}{\varepsilon_0(l - x)} \quad (6)$$

$$V_{oc} = \frac{\sigma\, xd}{\varepsilon_0(l - x)} \quad (7)$$

$$C = \frac{\varepsilon_0 w(l - x)}{d} \quad (8)$$

E. Simulation in Triboelectric generator

Simulation play an important role in understanding the mechanisms of charge generation, effects of material and device structure on the performance, therefore simulation will provide guidance to material selection, the device and process design etc., without needing practical experiments on device fabrication and testing. This could speed up the development, save resources of the R&D. Electrostatic and load circuit simulation are the two fundamental simulation methods for TEG. Using electrostatic simulation from V-Q-x relationship V_{OC} and C(x) characteristics can be evaluated. Numerical calculation based on FEM can be done utilizing COMSOL Multiphysics FEM software. Load circuit simulation can be simulated by using SPICE software [8].

F. COMPUTATIONAL ANALYSIS IN SLIDING MODE

The in-plane charge-separation-induced potential diff erence can be verified through numerical simulation (electrostatic) using COMSOL [12]. The equations (6) and (7) shows the dependence of relative permittivity of materials in the generated output voltage. The model constructed here has the dimensions (71 mm × 50 mm in surface) and the two tribo-charged surfaces are assigned with a charge density of ±70 μC/m^2, respectively. The device considered here is in open-circuit condition where no electron transfer between the two electrodes takes place. The parameters used for the model are listed in table 1.

Table 1. Parameters used for modeling the TEG in sliding mode

Parameters		
	symbol	Value
Dielectric thickness	d	.001m
Width of dielectrics	w	.050m
Length of dielectrics	l	0.071m
Surface charge density	σ	70 μCm^{-2}

Table 2 shows the material pairs selected from triboelectric series based on the electron affinities for the investigation. The materials are chosen here based on the relative permittivity.

Table2. Material combinations used in proposed TEG models in sliding mode

S No	Tribo electric Material combin ation	Dielec tric 1	Relat ive perm ittivit y	Dielectr ic 2	Relative permittiv ity
1	PVDF-PDMS	PVDF	6.8	PDMS	2.75
2	PTFE-Nylon	PTFE	2	Nylon	4
3	PET-PTFE	PET	3.4	PTFE	2
4	Kapton-PVDF	Kapto n	3.4	PVDF	6.8

Results and Discussion

The sliding mode TEG is modeled using Comsol and applied the material combinations using table2 datas, subjected to surface charge density at both the dielectrics in open circuit condition. Electric potential as output characteristic is analyzed at various sliding distances of 0, 20mm, 40mm, 60mm and 71mm (Xmax). The result data is shown in table 3 which shows the variation of electrical potential with sliding distance for different material combinations.

Table3. V-x output characteristics for selected TENG material combinations

Tribo electric material combination	Sliding mode				
	Electric Potential (V) at various X values				
	10 mm →	20	40	60	71
PVDF-PDMS	3270	4160	7320	19700	101000
PTFE-Nylon	2670	3890	8380	25200	110000
PET-PTFE	3030	4320	9050	26600	112000
Kapton-PVDF	2700	3470	6220	17200	97400

As shown by the simulation results, when the two plates are in the fully aligned position, which corresponds to the state in Figure 3a, there is no potential diff erence generated. When the

top plate slides about halfway out, the potential increases. (Figure 4b-f)

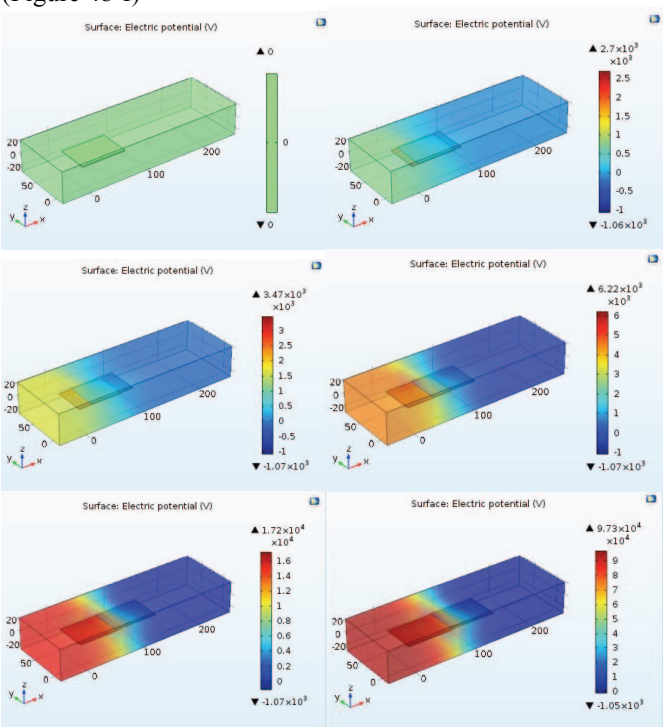

Fig4.(a-f)Finite element simulation of Kapton-PVDF TEG in sliding mode showing generated potentials at various sliding distances (0mm,10mm,20mm,40mm,60mm & 71mm)

The graph plotted with V against x Fig 5 shows that all the triboelectric pair in sliding mode exhibits similar characteristics with increase in sliding contact distance. The result shows a region close to the maximum distance at which the output characteristics increases abruptly and this is observed in all the triboelectric pairs between 60mm and 70mm.

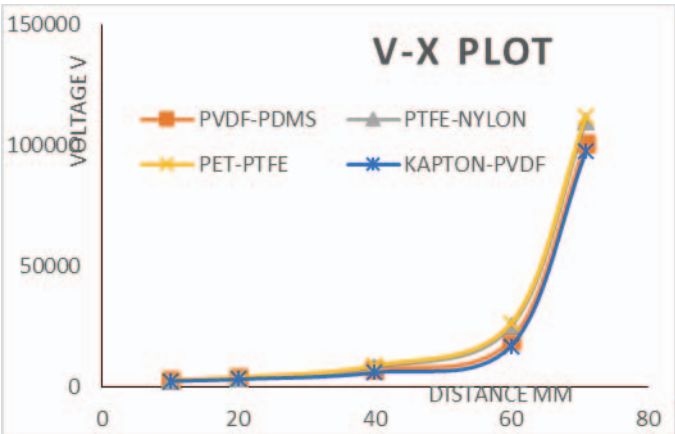

Fig 5. Voltage against distance for all triboelectric series Chosen

III. CONCLUSIONS

In summary, theoretical analysis and computational simulation on a sliding mode TEGs were conducted using various pairs of materials selected from triboelectric series. The output performance of the TEGs vary with the properties of the two dielectric materials. The simulation result of TEG pairs shows a characteristic behavior close to the maximum sliding distance which requires further investigation.

References

[1] S. Li, W. Peng, J. Wang, L. Lin, Y. Zi, G. Zhang and Z. Wang, "All-Elastomer-Based Triboelectric Nanogenerator as a Keyboard Cover To Harvest Typing Energy", *ACS Nano*, vol. 10, no. 8, pp. 7973-7981, 2016.

[2] Z. Wang, J. Chen and L. Lin, "Progress in triboelectric nanogenerators as a new energy technology and self-powered sensors", *Energy Environ. Sci.*, vol. 8, no. 8, pp. 2250-2282, 2015.

[3] S. Chen, X. Cao, N. Wang, L. Ma, H. Zhu, M. Willander, Y. Jie and Z. Wang, "An Ultrathin Flexible Single-Electrode Triboelectric-Nanogenerator for Mechanical Energy Harvesting and Instantaneous Force Sensing", *Advanced Energy Materials*, vol. 7, no. 1, p. 1601255, 2016.

[4] Y. Zi, H. Guo, Z. Wen, M. Yeh, C. Hu and Z. Wang, "Harvesting Low-Frequency (<5 Hz) Irregular Mechanical Energy: A Possible Killer Application of Triboelectric Nanogenerator", *ACS Nano*, vol. 10, no. 4, pp. 4797-4805, 2016.

[5] G. Zhu, Z. Lin, Q. Jing, P. Bai, C. Pan, Y. Yang, Y. Zhou and Z. Wang, "Toward Large-Scale Energy Harvesting by a Nanoparticle-Enhanced Triboelectric Nanogenerator", *Nano Letters,* vol. 13, no. 2, pp. 847-853, 2013.

[6] Y. Zi, L. Lin, J. Wang, S. Wang, J. Chen, X. Fan, P. Yang, F. Yi and Z. Wang, "Triboelectric-Pyroelectric-Piezoelectric Hybrid Cell for High-Efficiency Energy-Harvesting and Self-Powered Sensing", *Advanced Materials*, vol. 27, no. 14, pp. 2340-2347, 2015.

[7] Z. Wang, "Triboelectric nanogenerators as new energy technology and self-powered sensors – Principles, problems and perspectives", *Faraday Discuss.*, vol. 176, pp. 447-458, 2014.

[8] Z. Wang, L. Lin, J. Chen, S. Niu and Y. Zi, *Triboelectric Nanogenerators.* Cham: Springer International Publishing, 2016.

[9] S. Niu, Y. Zhou, S. Wang, Y. Liu, L. Lin, Y. Bando and Z. Wang, "Simulation method for optimizing the performance of an integrated triboelectric nanogenerator energy harvesting system", *Nano Energy*, vol. 8, pp. 150-156, 2014.

[10] S. shafeek and J. Luo, "Theoretical and numerical analysis of triboelectric nanogenerators for self-powered sensors", in *Electronic Devices, Systems and Applications (ICEDSA), 2016 5th International Conference* on, 2016, pp. 1-4.

[11] S. Niu and Z. Wang, "Theoretical systems of triboelectric nanogenerators", *Nano Energy*, vol. 14, pp. 161-192, 2015.

[12] Z. Wang, "Triboelectric Nanogenerators as New Energy Technology for Self-Powered Systems and as Active Mechanical and Chemical Sensors", *ACS Nano*, vol. 7, no. 11, pp. 9533-9557, 2013.